Z45X-1.0/1.6-0

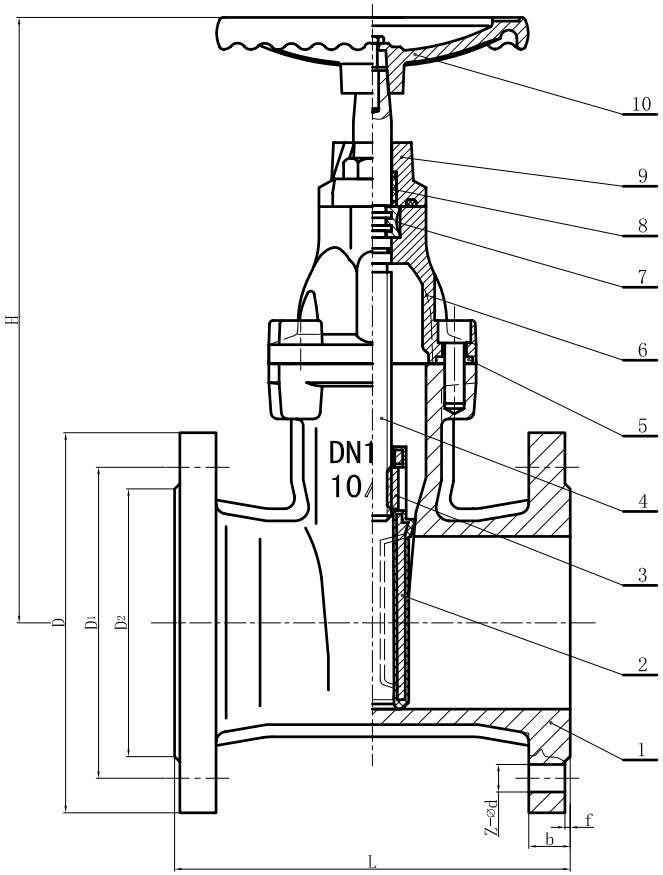

Technical requirment

1. Design and manufactuer as per DIN3352?.
2. face to face DIN3202.
3. flange as per DIN2502.
4. test as per ISO 5208
5. face to face DIN3202 F4/F5.

5. Main Property:

Property						
W.P (MPa)		1.0/1.6				
Medium		Drinking water etc				
test pressure (MPa)	Back sealing	——	test medium	——	temp ° C	nomal temp
	Sealing	1.1/1.8		water		
	Strength	1.5/2.4		water		
	Air	0.6		air		
suitable temp		0~80° C				

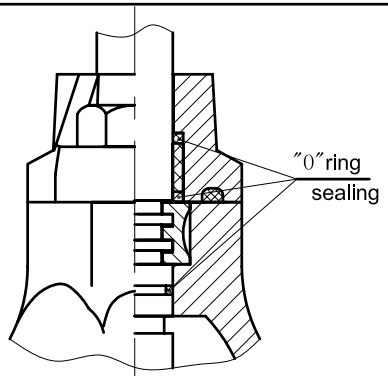

6、Main dimension

unit: (mm)

Type	Nominal	L(mm)		b	f	D2	D1		D	Z-ød		D0	ref(F4)	
		F4	F5				1.0MPa	1.6MPa		1.0MPa	1.6MPa		H	
Z45X	350	290	550	30	4	430	460	470	520	16-23		320	800	
	400	310	600	32	4	482	515	525	580	16-27		350	900	
	450	330	650	32	4	530	565	585	640	12-27 (8-M24)		350	1020	
	500	350	700	34	4	585	620	650	715	12-27 (8-M24)		550	1140	
	600	390	800	36	5	685	725	770	840	12-30 (8-M27)		650	1320	
	700	430	900	40	5	800	840	585	910	16-30 (8-M27)		680	1900	
	800	350	700	44	5	585	950		1015	14-34 (10-M30)				
	900	390	800	46	5	685	1050		1115	18-34 (10-M30)				
	1000	430	900	50	5	800	1160		1230	18-37 (10-M33)				

Item	Name	Material
7	trust collar	AL-bronze
6	bonnet	cast iron/D.i
5	sealing ring	NBR
4	stem	2Cr13
3	nut	al-bronze
2	wedge	WCB+EPDM
1	body	cast iron/D.I

item	Name	material
13	Hex. bolt	cast steel
12	"O"ring	NBR
11	inside hex bolt	cast steel
10	handwheel	cast steel
9	gland	cast steel
8	PTFE Ring	PTFE

标记	处数	分区	更改文件号	签名	年月日

设计		2007.07.31	标准化		
核定					
工艺			批准		

rate 1:3

共 1 张 第 1 张

Gate

Z45X-1.0/1.6-0

借(通)用图登记
旧底图总号
底图总号
编 号
签 字
日 期