厦门泽瑞进出口有限公司
XIAMEN JIREH INDUSTRIAL CO., LTD.
Tel:+86-592-5616848
5616805
Fax:+86-592- 5616958

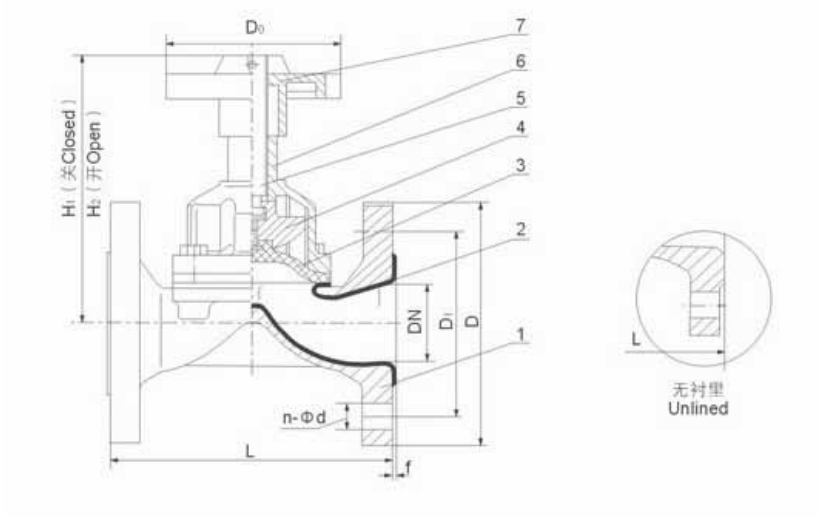

Design & manufacture: GB 12239
Face to face: GB 12221, JB1688
Flanged ends: GB4216, JB78
Test for lining layer: Electro spark detecting
Test: GB/T 13927

Body & Bonnet	Cast Iron, Carbon Steel, Stainless Steel
Lining	Unlined, Fluorine Plastic
Diaphragm	Fluorine Plastic
Disc	Cast Iron, Stainless Steel
Stem	Carbon Steel, Stainless Steel

DN	L	D	D1	D0	Z-φd	H	Weight kg
20	121	105	75	70	4-φ14	92	3
25	131	115	85	83	4-φ14	96	4
32	150	140	100	114	4-φ18	131	6.5
40	163	150	110	114	4-φ18	142	7.5
50	194	165	125	150	4-φ18	167	10.5
65	220	185	145	165	4-φ18	203	17.5
80	258	200	160	230	8-φ18	216	25
100	309	220	180	280	8-φ18	270	36
125	362	250	210	280	8-φ18	319	47
150	412	285	240	368	8-φ22	365	73
200	529	340	295	483	8-φ22	462	142
250	641	395	350		12-φ22		
300	757	445	400		12-φ22		

1105 Block B Yucheng Bldg., No. 51 Dongdu Road, Xiamen, China
E-mail: jireh@jirehvalve.com http://www.jirehvalve.com